ESP-F

Product Specification

——2.4GHz Wi-Fi Module

Version: 1.3

Date: Sept.3, 2025

Features

■ SOC features

- Built-in Tensilica L106 ultra-low power consumption 32-bit MCU, the main frequency can be 80MHz and 160MHz, also support RTOS;
- Built-in TCP/IP protocol stack;
- Built-in 1 channel 10-bit high precision ADC;
- Interfaces include HSPI, UART, I2C, I2S, IR Remote Control, PWM, GPIO;
- 20uA deep-sleep current, less than 10uA cut-off current;
- 2ms wake-up time;
- 1.0mW consume power (DTIM3 and standby state);

■ Wi-Fi features

- Support 802.11 b/g/n/e/i
- Support three modes: Station, SoftAP, and SoftAP+STA;
- Support Wi-Fi Direct (P2P);
- Support hardware acceleration for CCMP (CBC-MAC, computation mode), TKIP (MIC, RC4), WAPI(SMS4), WEP(RC4), CRC;
- P2P detection, P2P GO mode/GC mode and P2P power management;
- WPA/PA2 PSK and WPS;
- Support 802.11 i security: pre-certification and TSN;
- Support 802.11n (2.4 GHz);
- 802.1h/RFC1042 frame encapsulation;
- Support seamless roam;
- Support AT remote upgrade and cloud OTA upgrade;
- Support Smart config function for Android and iOS device.

■ Module Interface

- 2 x UART
- 1 x ADC
- 1 x EN
- 1 x Wakeup pin
- 1 x HSPI
- 1 x I2C
- 1 x I2S
- 11 x GPIOs
- 4M SPI Flash

■ **Working temperature：** -40℃-105℃

■ **Module size：** 16mm×24mm×3mm

Applications

- Serial transparent transmission;
- WiFi prober;
- Smart power plug/Smart LED light;
- Mesh networks;
- Sensor networks;
- Wireless location recognition;
- Wireless location system beacon;
- Industrial wireless control.

Module Type

Name	Antenna Type
ESP-F	PCB ANT

Module Structure

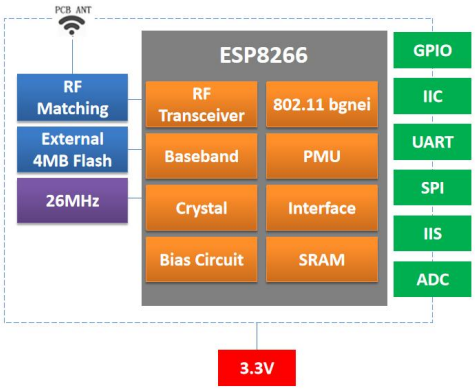

DOIT

Update Record

Date	Version	Update
2017-3-14	V1.0	First released
2017-3-18	V1.1	Add PCB design
2018-9-11	V1.2	Add system design
2022-9-30	V1.3	Add ESD design

DOIT

Table of Contents

1. Introduction 1

2. Interface Definition 3

3. Shape and Size 5

4. Electronica Characteristics 6

5. Power Consumption 7

6. Wi-Fi RF Characteristics 7

7. Recommended Sold Temperature Curve 8

8. Minimum User System 9

9. Recommended Layout Design 10

10. Peripheral Design Suggestion 11

11. Product Handling 11

12. Packing Instruction 12

Appendix：module schematic 13

DOIT

1. Introduction

The WiFi module ESP-F is manufactured by using a high-performance chip named ESP8266. This small chip is encapsulated an enhanced Tensilica's L106 diamond series 32-bit kennel CPU with a SRAM. Thus, ESP8266 has the complete function Wi-Fi function; it can be applied independently, and also can be used as a slaver working with other host CPU. When ESP8266 is applied as a slaver, it can start from the onboard flash. The built-in high-speed buffer is not only benefit to improve the system performance, but optimize the store system. In addition, ESP-F WiFi module can be used as Wi-Fi adapter by SPI/SDIO or I2C/UART interface, when it is applied to other MCU design.

The ESP-F WiFi module supports the standard IEEE802.11 b/g/n/e/i protocol and the complete TCP/IP protocol stack. User can use it to add the WiFi function for the installed devices, and also can be viewed as an independent network controller. Anyway, ESP-F module provides many probabilities with the best price.

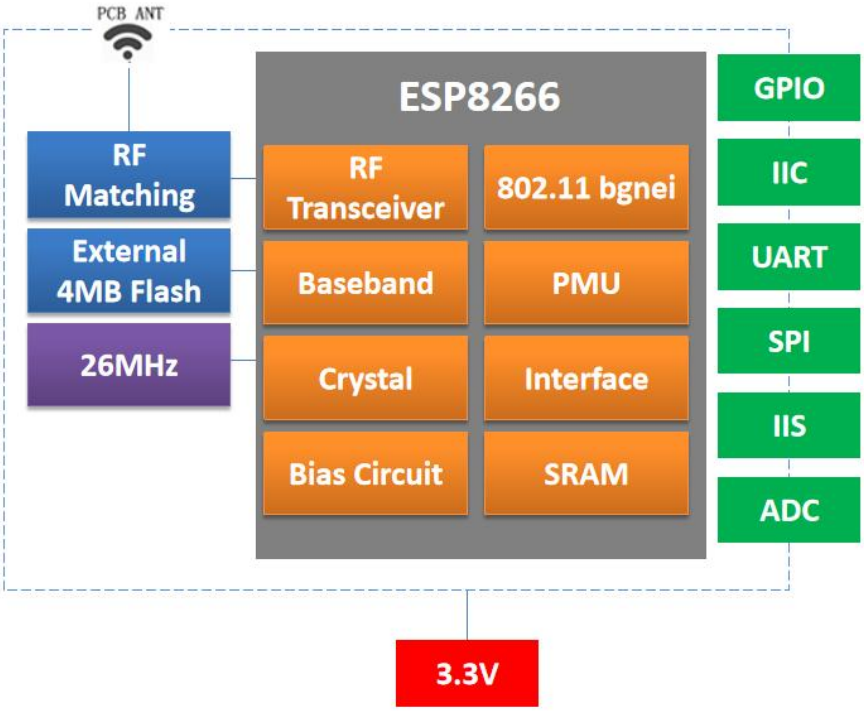

Fig. 1.1 ESP-F Module Structure

Technical parameters for ESP-F are listed as follows.

Table 1.1 ESP-F Parameters

Type	Items	Parameters
Wi-Fi	Frequency	2.4G~2.5G(2400M~2483.5M)
	Transmit power	802.11b: +20 dBm
		802.11g: +17 dBm
		802.11n: +14 dBm
	Receiver sensitivity	802.11b: -91 dBm (11Mbps)
		802.11g: -75 dBm（54Mbps）
		802.11n: -72 dBm（MCS7）
	Antenna	PCB antenna
Hardware	CPU	Tensilica L106 32 bit MCU
	Interface	UART/SDIO/SPI/I2C/I2S/IR control
		GPIO/ADC/PWM/SPI/I2C/I2S
	Working voltage	2.8V ~ 3.6V
	Working current	Average current: 80 mA Peak current: >200mA
	Working temperature	-40°C ~105°C
	Environment temperature	-40°C ~ 105°C
	Shape	16 x 24 x 3mm
Software	Wi-Fi working mode	Station/SoftAP/SoftAP+Station
	Security mode	WPA/WPA2
	Encryption type	WEP/TKIP/AES
	Update firmware	UART Download/OTA
	Software develop	Non-RTOS/RTOS/Arduino IDE etc.
	Network protocol	IPv4, TCP/UDP/HTTP/FTP/MQTT

DOIT

2. Interface Definition

ESP-F module interface definition is shown as below.

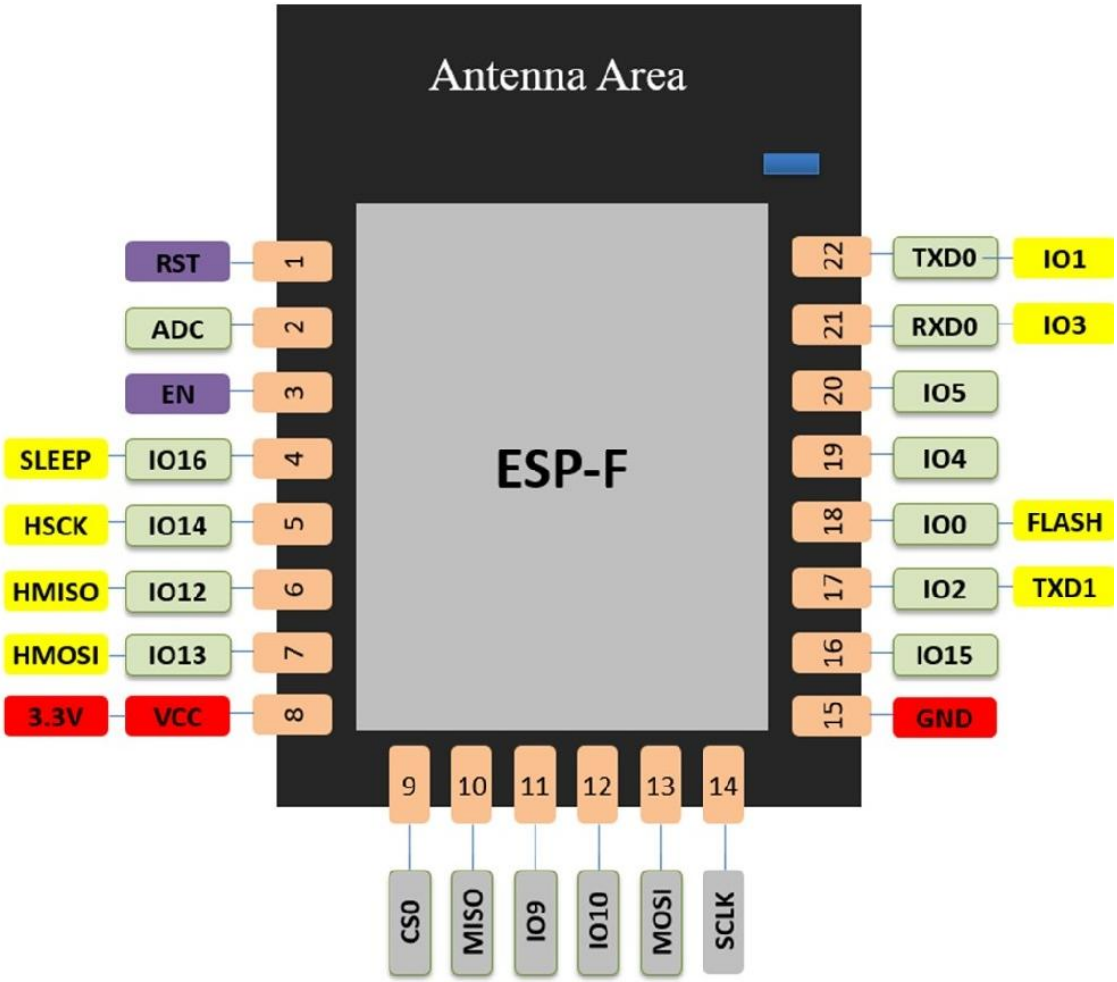

Fig. 2.1 ESP-F Pins Definition

Working mode and pins function are shown in Table 2.1.

Table 2.1 Working mode

Mode	GPIO0 Level
UART Download Mode	Low
Flash Boot Mode	High (Default)

Table 2.2 Pin Function Definition

Num.	Definition	Type	Function
1	RST	I	Effective: Low level. Used to reset the module
2	ADC	I	A/D pin. Voltage Range: 0-1V. 10bit resolution
3	EN	I	Effective: High level. Used to enable the module
4	IO16	I/O	GPIO16. Used to wake up the module
5	IO14	I/O	GPIO14; HSPI_CLK
6	IO12	I/O	GPIO12;HSPI_MISO
7	IO13	I/O	GPIO13;HSPI_MOSI; UART0_CTS
8	VCC	P	POWER：3.3V
9	CS0	I/O	GPIO11; SD_CMD; SPI_CS0
10	MISO	I/O	GPIO7; SD_D0, SPI_MSIO
11	IO9	I/O	GPIO9; SD_D2 PIHD; HSPIHD
12	IO10	I/O	GPIO10; SD_D3; SPIWP; HSPIWP1
13	MOSI	I/O	GPIO8; SD_D1; SPI_MOSI1
14	SCLK	I/O	GPIO6; SD_CLK; SPI_CLK
15	GND	P	GND
16	IO15	I/O	GPIO15; MTDO;HSPICS;UART0_RTS
17	IO2	I/O	GPIO2; UART1_TXD
18	IO0	I/O	GPIO0; SPI_CS2
19	IO4	I/O	GPIO4
20	IO5	I/O	GPIO5
21	RXD	I/O	GPIO3; UART Rxd
22	TXD	I/O	GPIO1; UART Txd

DOIT

3. Shape and Size

Shape and size for ESP-F can be shown as follows. The internal flash of ESP-F is 32 Mbits.

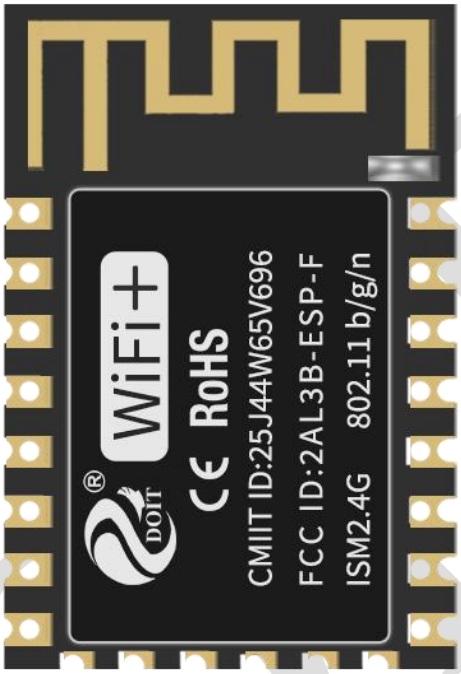

Fig.3.1 Shape for ESP-F

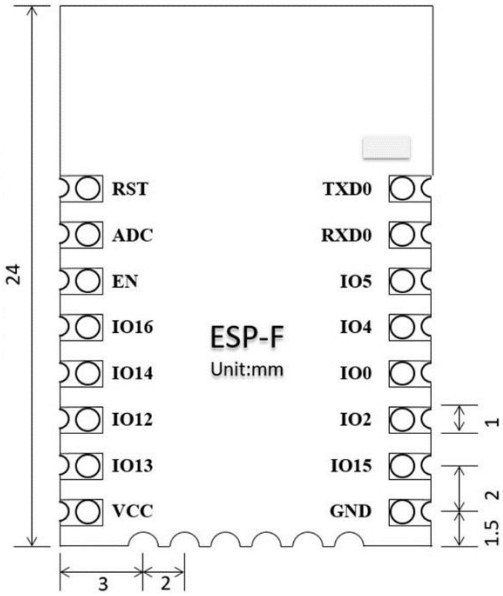

(a) Vertical View

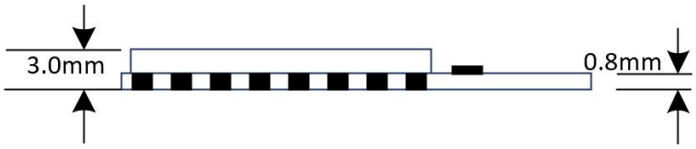

(b) Side View

Fig. 3.2 Size for ESP-F

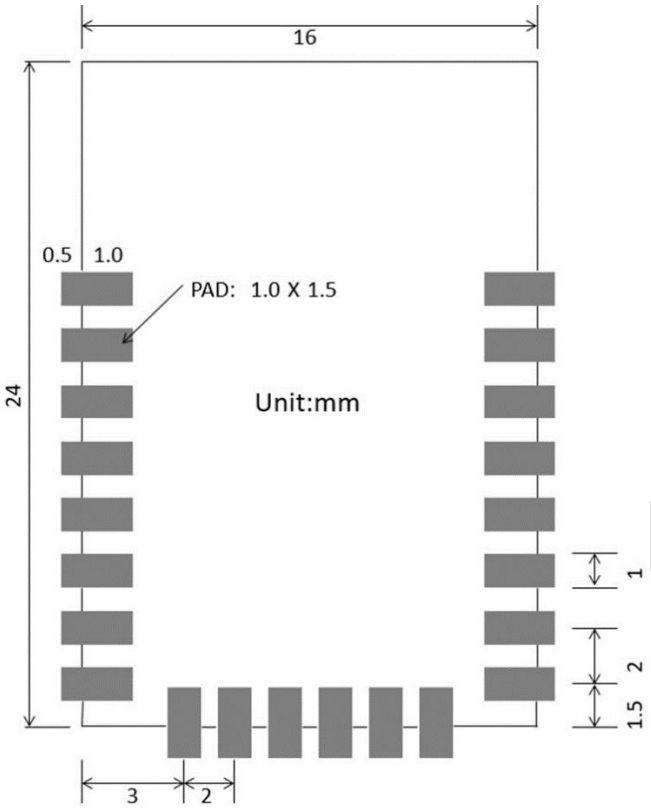

Fig. 3.3 PCB Layout for ESP-F

Table 3.1 Size for ESP-F

Length	Width	Height	PAD Size (bottom)	Distance between Pins
16 mm	24 mm	3 mm	0.9 mm x 1.7mm	2 mm

4. Electronica Characteristics

Table 4.1 Electronica Characteristics

Parameters		Condition	Min	Classical	Max	Unit
Store Temperature		-	-40	Normal	125	℃
Sold Temperature		IPC/JEDEC J-STD-020	-	-	260	℃
Working Voltage		-	2.8	3.3	3.6	V
I/O	V_{IL}/V_{IH}	-	$-0.3/0.75V_{IO}$	-	$0.25V_{IO}/3.6$	I/O
	V_{OL}/V_{OH}	-	$N/0.8V_{IO}$	-	$0.1V_{IO}/N$	
	I_{MAX}	-	-	-	12	mA
Electrostatic release quantity (Human model)		TAMB=25℃	-	-	2	KV

Electrostatic release quantity (Machine model)	TAMB=25℃	-	-	0.5	KV

5. Power Consumption

Table 5.1 Power Consumption

Parameters	Min	Classical	Max	Unit
Tx802.11b, CCK 11Mbps, POUT=+17dBm	-	170	-	mA
Tx802.11g, OFDM 54 Mbps, POUT =+15dBm	-	140	-	mA
Tx802.11n,MCS7,POUT =+13dBm	-	120	-	mA
Rx 802.11b，1024 Bytes, -80dBm	-	50	-	mA
Rx 802.11g，1024 Bytes, -70dBm	-	56	-	mA
Rx 802.11n，1024 Bytes, -65dBm	-	56	-	mA
Modem-sleep①	-	15	-	mA
Light-sleep②	-	0.9	-	mA
Deep-sleep③	-	20	-	μA

Note:

① : Modem-Sleep mode can be used for the case that CPU is always working, e.g., PWM or I2S etc. If WiFi is connected and no data is to transmit, in this case, WiFi modem can be closed to save power energy. For example, if at DTIM3 status, keep asleep at 300ms, then the module can wake up to receive the Beacon package within 3ms and the current being 15mA.

②: Light-Sleep mode can used for the case that CUP can stop the application temporally, e.g., Wi-Fi Switch. If Wi-Fi is connected and there is no data packet to transmitted, by the 802.11 standard (e.g., U-APSD), module can close Wi-Fi Modem and stop CPU to save power. For example, at DTIM3, keep up sleeping at 300ms, it would receive the Beacon package from AP after each 3ms, then the whole average current is about 0.9mA.

③ Deep-Sleep mode is applied to the case that Wi-Fi is not necessary to connect all the time, just send a data packet after a long time (e.g., transmit one temperate data each 100s) . It just need 0.3s-1s to connect AP after each 300s, and the whole average current is much smaller 1mA.

6. Wi-Fi RF Characteristics

The data in the following Table is gotten when voltage is 3.3V and 1.1V in the indoor temperature environment.

Table 6.1 Wi-Fi RF Characteristics

Parameters	Min	Classical	Max	Unit
Input frequency	2412	-	2484	MHz
Input impedance	-	50	-	Ω
Input reflection	-	-	-10	dB
At 72.2Mbps, output power consumption for PA	15.5	16.5	17.5	dBm
At 11b mode, output power consumption for PA	19.5	20.5	21.5	dBm
Sensibility				
DSSS, 1Mbps	-	-98	-	dBm
CCK11, Mbps	-	-91	-	dBm
6Mbps(1/2 BPSK)	-	-93	-	dBm
54Mbps(3/4 64-QAM)	-	-75	-	dBm
HT20, MCS7(65 Mbps, 72.2 Mbps)	-	-72	-	dBm
Adjacent Inhibition				
OFDM, 6Mbps	-	37	-	dB
OFDM, 54Mbps	-	21	-	dB
HT20, MCS0	-	37	-	dB
HT20, MCS7	-	20	-	dB

7. Recommended Sold Temperature Curve

(1) Reflow Times <= 2 times (Max.)

(2) Max Rising Slope: 3℃/sec

(3) Max Falling Slope: -3℃/sec

(4) Over 217℃ Time: 60~120 sec

(5) Peak Temp:240℃~250℃

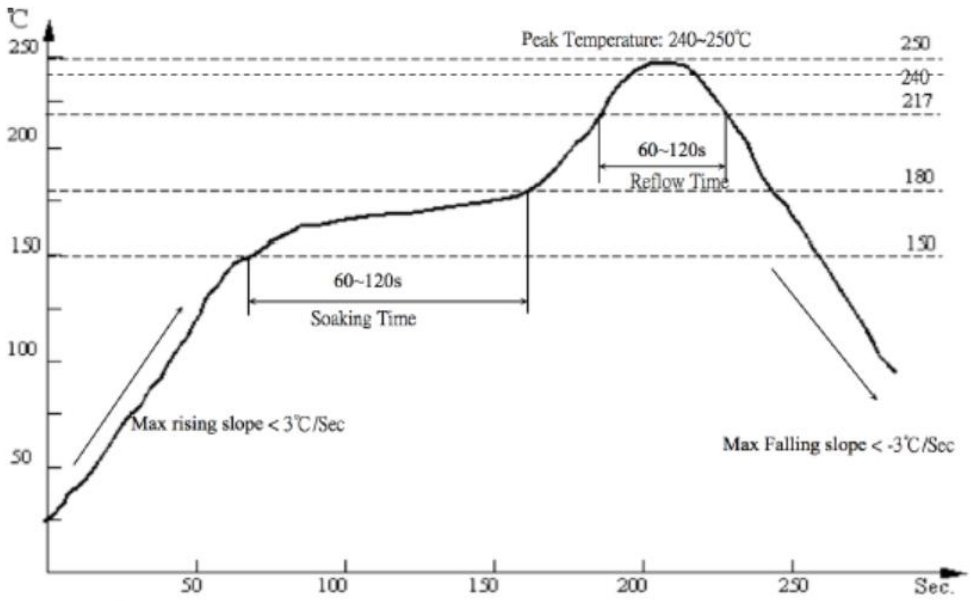

Fig.7.1 Recommended Reflow Profile

8. Minimum User System

This module can work just at 3.3V working voltage:

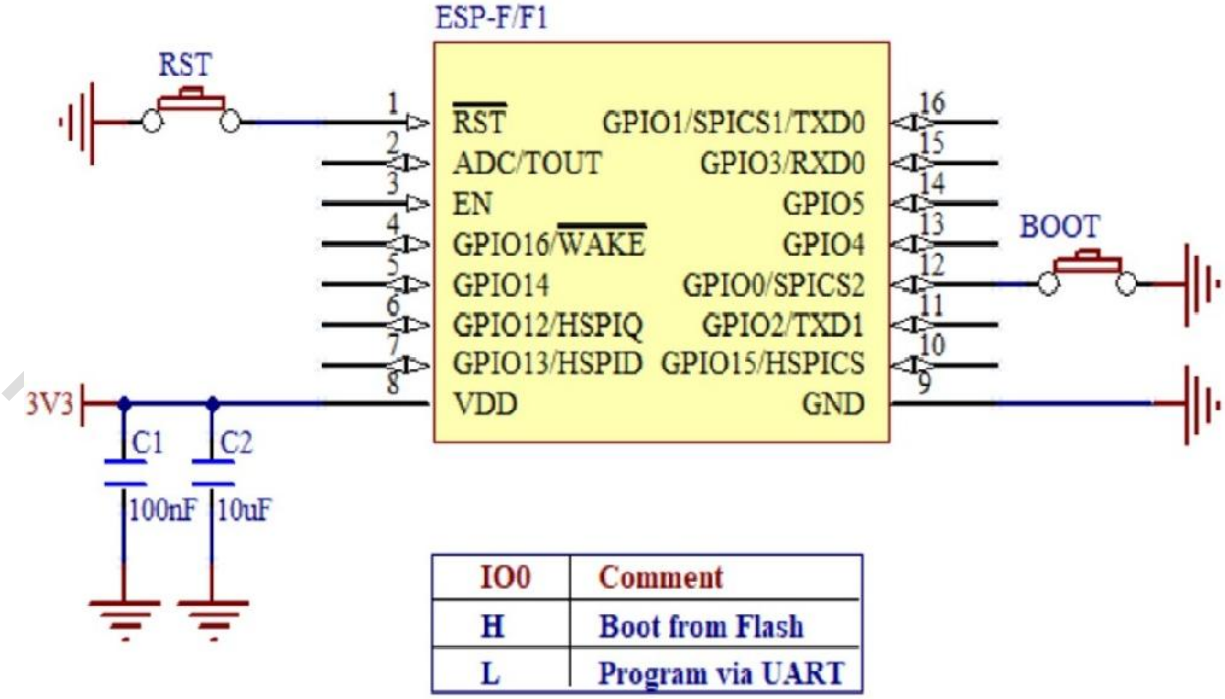

IO0	Comment
H	Boot from Flash
L	Program via UART

Fig.8.1 Minimum user system

Note:

(1) The working voltage for module is DC 3.3V;

(2) The max current from IO of this module is 12mA;

(3) RST Pin is enabled when it is low level; and EN pin is enabled when it is high level;

(4) WiFi module is at update mode: GPIO0 is low level, then module reset to power; Wi-Fi module is at working mode: GPIO0 is at high level, and then reset to power;

(5) Wi-Fi module is connected to RXD of the other MCU, and TXD is connected to RXD of the other MCU.

9. Recommended Layout Design

ESP-F module can be sold on PCB board directly. For the high RF performance for the device, please notice the placement of the module. There are three ways to use the module for Wi-Fi Module with PCB antenna.

Solution 1: optical solution. The Wi-Fi module is placed on the side of the board, and the antennas are all exposed, and there is no metal material around the antenna, including wires, metal casings, weight plates, and the like.

Solution 2: sub-optical solution. The Wi-Fi module is placed on the side of the board, and the antenna below is hollowed out. There is a gap of not less than 5 mm reserved with the PCB, and there is no metal material around the antenna, including wires, metal casings, weight plates, and the like.

Solution 3: The Wi-Fi module is placed on the side of the board, and the PCB area under the antenna is empty, and copper cannot be laid.

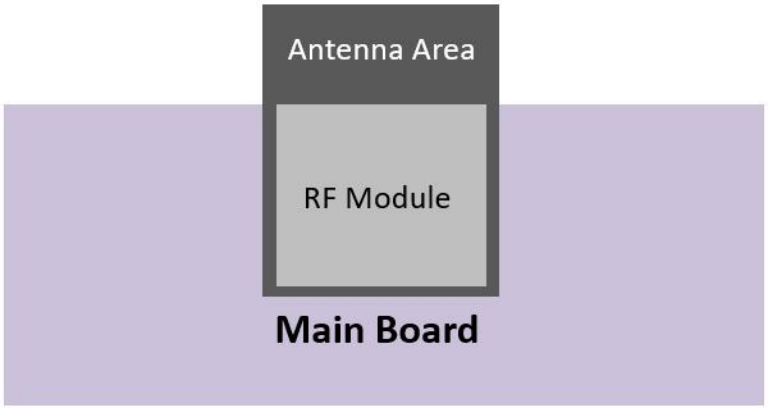

Fig.9.1 Solution 1

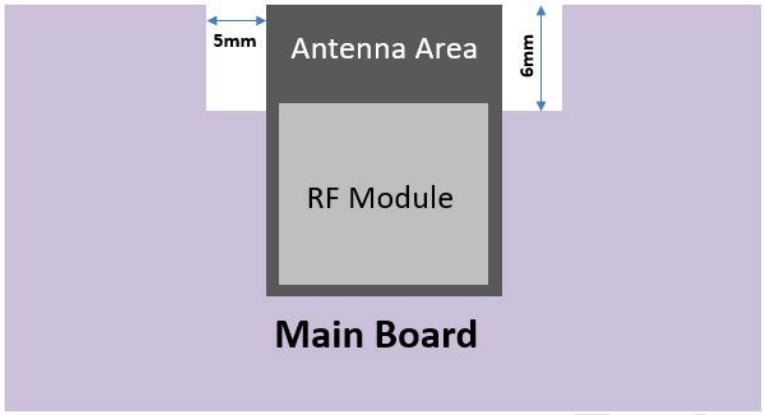

Fig.9.2 Solution 2

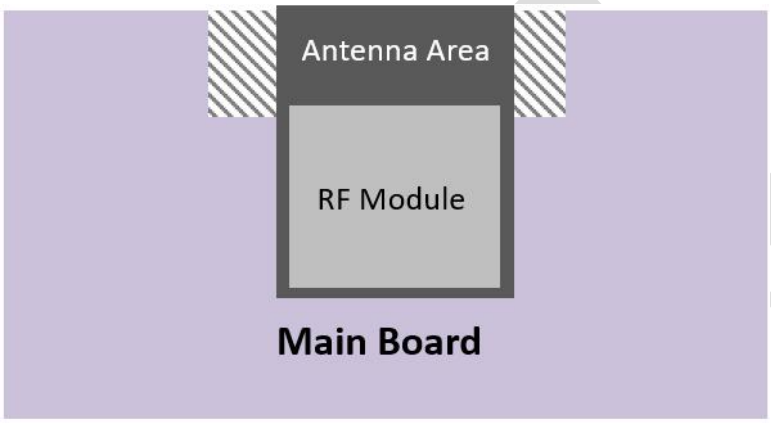

Fig.9.3 Solution 3

10. Peripheral Design Suggestion

Wi-Fi module is already integrated into high-speed GPIO and Peripheral interface, which may be generated the switch noise. If there is a high request for the power consumption and EMI characteristics, it is suggested to connect a serial 10~100 ohm resistance, which can suppress overshoot when switching power supply, and can smooth signal. At the same time, it also can prevent electrostatic discharge (ESD).

11. Product Handling

11.1 Storage Conditions

The products sealed in moisture barrier bags (MBB) should be stored in a non-condensing atmospheric environment of < 40 °C and 90%RH. The module is rated at the moisture sensitivity level (MSL) of 3. After unpacking, the module must be soldered within 168 hours with the factory conditions 25±5 °C and 60%RH. If the above conditions are not met, the module needs to be baked.

11.2 Electrostatic Discharge (ESD)

• Human body model (HBM): ±2000 V

• Charged-device model (CDM): ±500 V

• Embedded ESD device:25KV

12. Packing Instruction

The product is packed in a tray, as shown in the following figure.

The size of the single box is: 340 x 360 x 60mm, and 800 pieces module is in the box. And the outer box size is 355 x 375 x 325mm, including 5 single box which include 4000 pieces module.

Fig.12.1 Module package
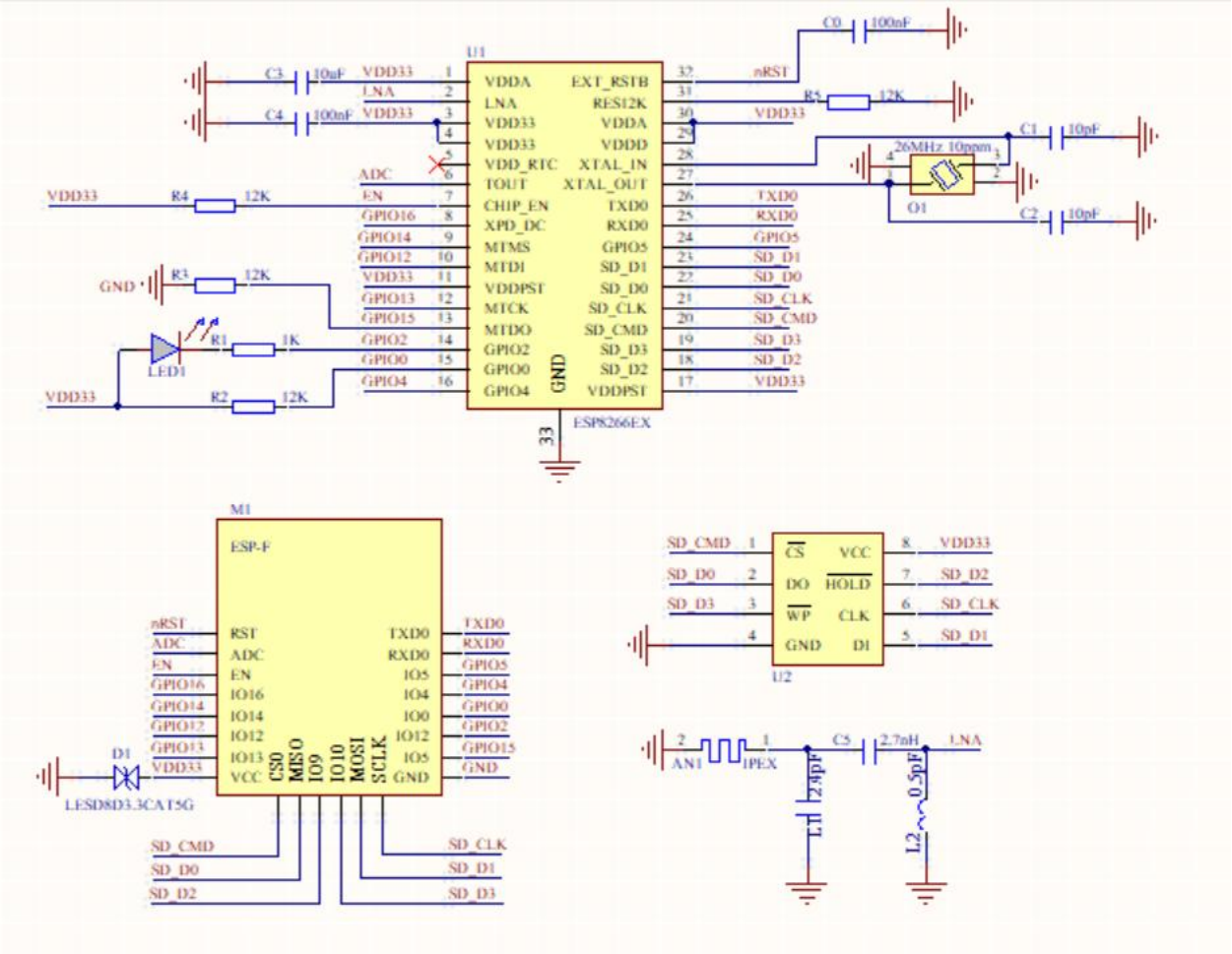
Appendix：Module schematic