ESPC2-20E

Product Specification

——2.4GHz Wi-Fi and BLE5.0 Combo Module

Version: 1.0 Date: Mar.11, 2023

Features

- **General**
  - Chip: ESP32-C2, ESP8684H2/ESP8684H4
  - Module Size:18mm*20mm*3mm
  - 16M/32M bit embedded flash
  - 576KB ROM
  - 272KB SRAM
- **Wi-Fi Features**
  - IEEE 802.11 b/g/n-compliant
  - Center frequency range of operating channel: 2412 ~ 2484 MHz
  - Supports 20 MHz bandwidth in 2.4 GHz band
  - 1T1R mode with data rate up to 72.2 Mbps
  - TX/RX A-MPDU, TX/RX A-MSDU
  - Immediate Block ACK
  - Fragmentation and defragmentation
  - Automatic Beacon monitoring (hardware TSF)
  - 3 x virtual Wi-Fi interfaces
  - Simultaneous support for Infrastructure BSS in Station mode, Soft-AP mode, Station + Soft-AP mode, and promiscuous mode
- **Bluetooth Features**
  - Bluetooth LE: Bluetooth 5
  - Speed: 125 Kbps, 500 Kbps, 1 Mbps, 2 Mbps
  - Advertising extensions
  - Multiple advertisement sets
  - Channel selection algorithm #2
- **Peripheral Interfaces**
  - GPIO * 14;
  - UART;
  - IIC ;
  - SPI;
  - EN ;
  - PWM x 6 ;
  - ADC;
- **Working Temperature:** -40℃-105℃

Applications

- Serial transparent transmission;
- Wi-Fi prober;
- Smart power plug/Smart LED light;
- Mesh networks;
- Sensor networks;
- Over-the-top (OTT) devices;
- Wireless location system beacon;
- Industrial field bus;

Module Type

Model	Flash
ESPC2-20E-N2	16M bit
ESPC2-20E-N4	32M bit

Module Structure

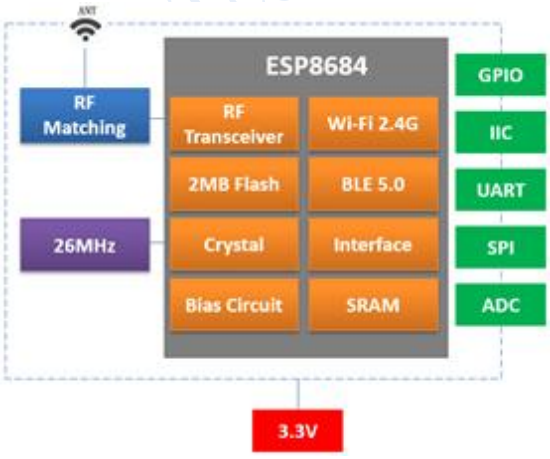

Doctors of Intelligence & Technology 严禁复制

Update Record

Date	Version	Update
2023-03-11	V1.0	First released

Table of Contents

1. Introduction 1

2. Interface Definition 3

3. Size and Layout 5

4. Electronica Characteristics 6

5. Power Consumption 7

6. Wi-Fi RF Characteristics 7

7. Bluetooth LE Radio 9

8. Recommended Sold Temperature Curve 11

9. Minimum User System 11

10. Recommended Layout Design 12

11. Peripheral Design Suggestion 13

12. Product Handling 13

13. U.FL RF Connector 14

14. Packing Instruction 14

15. Module Schematic 16

1. Introduction

ESPC2-20E Wi-Fi and BLE coexistence Module is a highly integrated single-chip low power 802.11bgn Wireless LAN (WLAN) network controller. It combines a RISC CPU, WLAN MAC, a 1T1R capable WLAN baseband, RF, and Bluetooth in a single chip. It also provides a bunch of configurable GPIO, which are configured as digital peripherals for different applications and control usage.

ESPC2-20E Module use ESP8684 as Wi-Fi and BLE coexistence SOC chip.

ESPC2-20E Module integrates internal memories for complete Wi-Fi protocol functions. The embedded memory configuration also provides convenient application developments.

ESPC2-20E module supports the standard IEEE802.11 b/g/n/e/i protocol and the complete TCP/IP protocol stack. User can use it to add the Wi-Fi function for the installed devices, and also can be viewed as an independent network controller. Anyway, ESPC2-20 Wi-Fi module provides many probabilities with the best price.

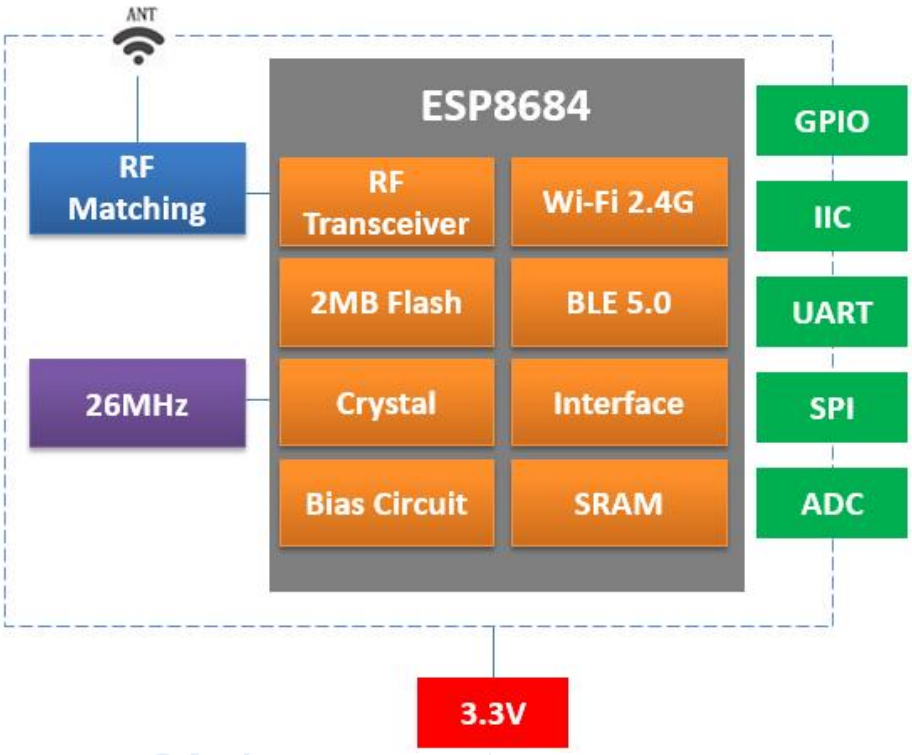

Fig.1.1 ESPC2-20 Module Structure

Technical parameters for ESPC2-20E are listed as follows.

Table.1.1 ESPC2-20 Parameters

Type	Item	Parameter
Wi-Fi	Frequency	2.4G~2.5G (2412M~2484M)
	Transmit power	802.11b: +20.5 dBm
		802.11g: +19 dBm
		802.11n: +18 dBm
	Receiver sensitivity	802.11b: -90 dBm (11Mbps)
		802.11g: -77 dBm（54Mbps）
		802.11n: -74 dBm（MCS7）
	EVM	-25dB @802.11b,11Mbps @21dBm
		-27dB @802.11n,54Mbps @19dBm
		-29dB @802.11n,HT20,MCS7 @18.5dBm
	Antenna	PCB antenna
BLE	RF power control range	-27~20dBm
Hardware	CPU	32-bit RISC CPU
	Interface	UART/SDIO/SPI/I2C/GPIO/PWM
	Working voltage	3.0V ~ 3.6V
	Working temperature	-40°C ~ 105°C
	Environment temperature	-40°C ~ 105°C
	Shape	18mm x 20mm x 3mm
Software	Wi-Fi working mode	STA, Soft-AP and sniffer modes
	Security mode	WPS / WEP / WPA / WPA2 / WPA3
	Update firmware	UART Download
	Software develop	SDK
	Network protocol	IPv4, TCP/UDP/HTTP/FTP/MQTT

Doctors of Intelligence & Technology 严禁复制

2. Interface Definition

ESPC2-20E Wi-Fi & BLE module interface definition is shown as below。

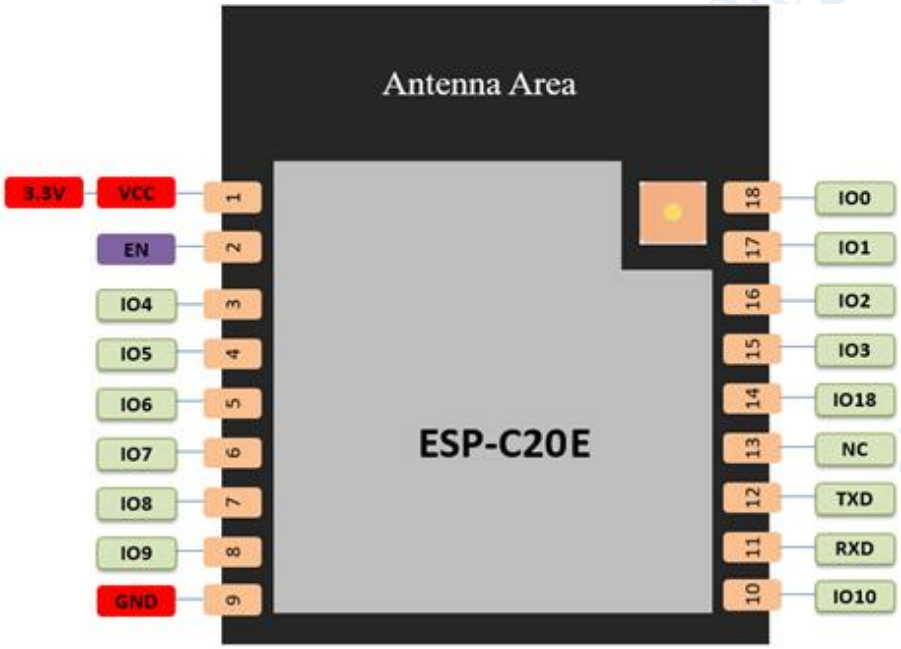

Fig.2.1 ESPC2-20 Pins Definition

Working modes and pins function are shown in Table 2.1.

Table.2.1Working Mode

Mode	IO9 Voltage Level
UART Download Mode	LOW
Flash Boot Mode	HIGH (Default)

Table.2.2 Pin Function Definition

Num.	Pin Name	Type	Function
1	VCC	P	Power, 3.3V/500mA Recommended
2	EN	I/O	Chip enable; Internal Pull-up. HIGH: enable the chip
3	IO4	I/O	GPIO4, ADC1_CH4, MTMS, FSPIHD
4	IO5	I/O	GPIO5,MTDI, FSPIWP
5	IO6	I/O	GPIO6, MTCK, FSPICLK
6	IO7	I/O	GPIO7, MTDO, FSPID

7	IO8	I/O	GPIO8
8	IO9	I/O	GPIO9
9	GND	P	Power, 3.3V/500mA Recommended
10	IO10	I/O	GPIO10, FSPICS0
11	RXD	I/O	GPIO19
12	TXD	I/O	GPIO20
13	NC	-	Not Connected
14	IO18	I/O	GPIO18
15	IO3	I/O	GPIO3, ADC1_CH3
16	IO2	I/O	GPIO2, ADC1_CH2, FSPIQ
17	IO1	I/O	GPIO1, ADC1_CH1
18	IO0	I/O	GPIO0, ADC1_CH0

Doctors of Intelligence & Technology 严禁复制

3. Size and Layout

Size for ESPC2-20E can be shown as follows.



Fig.3.1 Shape for ESPC2-20E

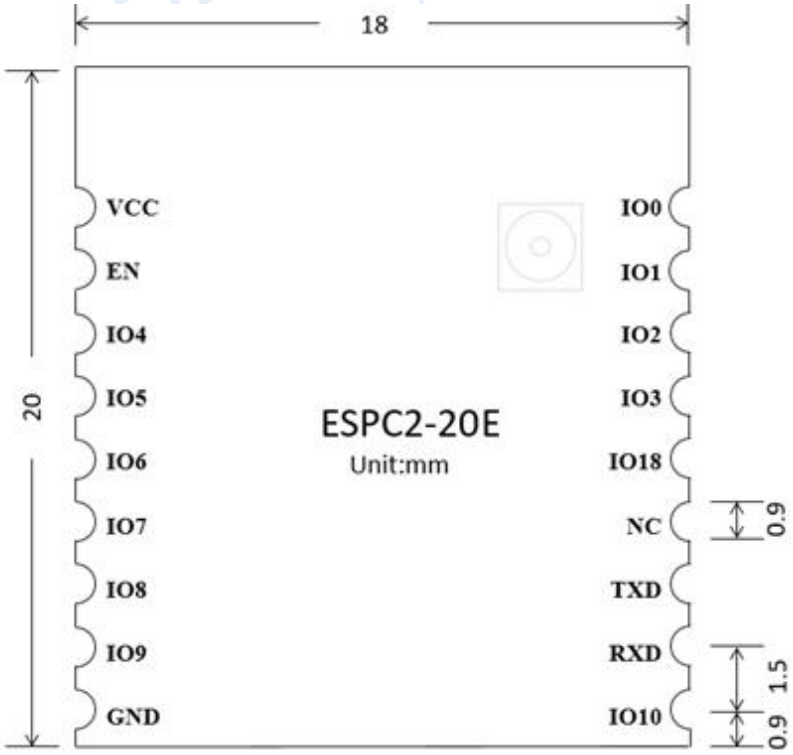

(a) Vertical View

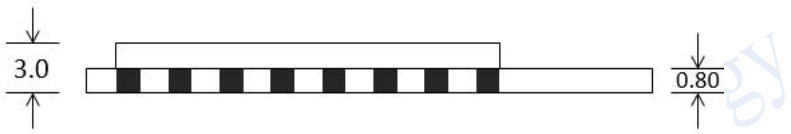

(b) Side View

Fig.3.2 Size for ESPC2-20E

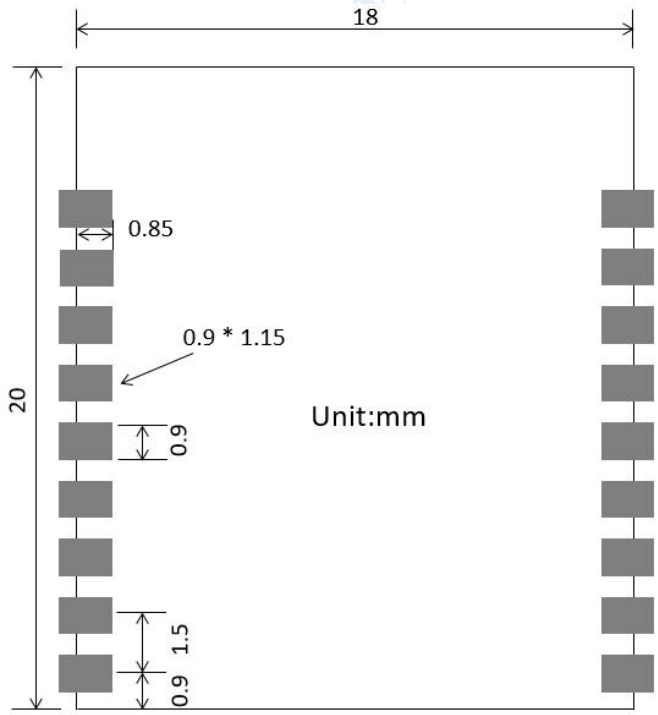

Fig. 3.3 PCB Layout for ESPC2-20E

4. Electronica Characteristics

Table.4.1 Electronica Characteristics

Parameters		Condition	Min	Classical	Max	Unit
Store Temperature		-	-40	Normal	150	℃
Sold Temperature		IPC/JEDEC J-STD-020	-	-	260	℃
Working Voltage		-	3.0	3.3	3.6	V
I/O	V_{IL}	-	-0.3	-	0.25*VDD	V
	V_{IH}	-	0.75*VDD	-	VDD+0.3	
	V_{OL}	-	-	-	0.1*VDD	
	V_{OH}	-	0.8*VDD	-	-	
Electrostatic Release Quantity (Human model)		TAMB=25℃	-	-	2	KV
Electrostatic Release Quantity (Machine model)		TAMB=25℃	-	-	0.5	KV

5. Power Consumption

Table.5.1 Power Consumption

Parameters	Min	Classical	Max	Unit
RX 11b /g/n, HT20	-	-	65	mA
TX 11b, 1Mbps @21dBm		-	370	
TX 11g, 54Mbps @19dBm	-	-	320	mA
TX 11n, HT20, MCS7, @18.5dBm	-	-	300	mA
Modem-sleep, CPU is powered on @80MHz	-	15	-	mA
Light-sleep	-	140	-	uA
Deep-sleep, RTC timer + RTC memory	-	5	-	uA
Power off, CHIP_PU is set to low level	-	1	0	uA

The peak current consumption of ESPC2-20E exceed 400mA when the module start work (RF calibration work consumes maximum current). Therefore, the recommended power supply is no less than 500mA.

Note:

1. Active Mode: CPU and RF are all turned on.

2. Modem-sleep Mode: CPU is turned on. RF and baseband are turned off, but the communication is still connected.

3. Light-sleep Mode: CPU is turned off. RTC/external interrupt/MAC can wake up the chip. The communication is still connected.

4. Deep-sleep Mode: Only RTC is turned on.

6. Wi-Fi RF Characteristics

The data in the following table is gotten when voltage is 3.3V in the indoor temperature environment.

Table.6.1 Wi-Fi TX Characteristics

Parameters	Min	Classical	Max	Unit
Input frequency	2412	-	2484	MHz
802.11b @1Mbps,11Mbps	-	20.5	-	dBm
802.11g @6Mbps	-	20.0	-	dBm

Doctors of Intelligence & Technology 严禁复制

802.11g @54Mbps	-	18.0	-	dBm
802.11n,HT20 MCS0	-	19.0	-	dBm
EVM @11b,1Mbps@20dBm	-	-25	-	dBm
EVM @11g,54Mbps@19dBm	-	-26	-	dBm
EVM @11n,MCS7@18.5dBm	-	-29	-	dBm

Table.6.2 Wi-Fi RX Sensitivity

Parameters	Min	Classical	Max	Unit
802.11b,1Mbps	-	-98	-	dBm
802.11b,11Mbps	-	-90.	-	dBm
802.11g,6Mbps	-	-92	-	dBm
802.11g,54Mbps	-	-76	-	dBm
802.11n,HT20,MCS0	-	-92	-	dBm
802.11n,HT20,MCS3	-	-85	-	dBm
802.11n,HT20,MCS7	-	-74	-	dBm

Table.6.3 Wi-Fi RX Characteristics

Parameters	Min	Classical	Max	Unit
MAX RX Level @11b,1Mbps	-	5	-	dBm
MAX RX Level @11b,11Mbps	-	5	-	dBm
MAX RX Level @11g,6Mbps	-	5	-	dBm
MAX RX Level @11g,54Mbps	-	0	-	dBm
MAX RX Level @11n,HT20,MCS0	-	5	-	dBm
MAX RX Level @11n,HT20,MCS7	-	-1	-	dBm
RX Adjacent Channel Rejection@11b,1Mbps	-	35	-	dB
RX Adjacent Channel Rejection@11b,11Mbps	-	35	-	dB
RX Adjacent Channel Rejection@11g,6Mbps	-	31	-	dB
RX Adjacent Channel Rejection@11g,54Mbps	-	20	-	dB
RX Adjacent Channel Rejection@11n,HT20,MCS0	-	16	-	dB
RX Adjacent Channel Rejection@11n,HT20,MCS7	-	25	-	dB

Doctors of Intelligence & Technology 严禁复制

7. Bluetooth LE Radio

Table.7.1 TX Transmitter General Characteristics

Parameters	Min	Classical	Max	Unit
RF power control range	-24	3	20	dBm
In-band emissions @F-F0±3MHz, LE 1M	-	-38	-	dBm
In-band emissions @F-F0±>3MHz, LE 1M	-	-41	-	dBm
Modulation characteristics @ △f1avg, LE 1M	-	249	-	kHz
Modulation characteristics @△f2max, LE 1M	-	246	-	kHz
In-band emissions @F-F0±5MHz, LE 2M	-	-43	-	dBm
In-band emissions @F-F0±>5MHz, LE 2M	-	-44	-	dBm
Modulation characteristics @ △f1avg, LE 2M	-	497	-	kHz
Modulation characteristics @△f2max, LE 2M	-	589	-	kHz
In-band emissions @F-F0±3MHz, LE 500K	-	-32	-	dBm
In-band emissions @F-F0±>3MHz, LE 500K	-	-38	-	dBm
Modulation characteristics @ △f1avg, LE 500K	-	273	-	kHz
Modulation characteristics @△f2max, LE 500K	-	243	-	kHz

Table.7.2 RX Transmitter General Characteristics

Parameters		Min	Classical	Max	Unit
1M	Sensitivity @30.8% PER	-	-98	-	dBm
	Maximum received signal @30.8% PER	-	8	-	dBm
	Co-channel C/I	-	8	-	dB
	Image frequency	-	-33	-	dB
	Adjacent channel to image frequency @F =F_{image}+1	-	-32	-	dB
	Adjacent channel to image frequency @F =F_{image}-1	-	-34	-	dB
	Adjacent channel selectivity @ F =F0+1	-	-1	-	dB
	Adjacent channel selectivity @ F =F0-1	-	-3	-	dB
	Adjacent channel selectivity @ F ≥F0+3	-	-33	-	dB
	Adjacent channel selectivity @ F ≤F0-3	-	-31	-	dB
	Sensitivity @30.8% PER	-	-95	-	dBm

2M	Maximum received signal @30.8% PER	-	8	-	dBm
	Co-channel C/I	-	9	-	dB
	Image frequency	-	-35	-	dB
	Adjacent channel to image frequency @F =F_{image}+2	-	-35	-	dB
	Adjacent channel to image frequency @F =F_{image}-2	-	-11	-	dB
	Adjacent channel selectivity @ F =F0+2	-	-11	-	dB
	Adjacent channel selectivity @ F =F0-2	-	-7	-	dB
	Adjacent channel selectivity @ F ≥F0+6	-	-39	-	dB
	Adjacent channel selectivity @ F ≤F0-6	-	-33	-	dB
125K	Sensitivity @30.8% PER	-	-106	-	dBm
	Maximum received signal @30.8% PER	-	8	-	dBm
	Co-channel C/I	-	3	-	dB
	Image frequency	-	-41	-	dB
	Adjacent channel to image frequency @F =F_{image}+1	-	-7	-	dB
	Adjacent channel to image frequency @F =F_{image}-1	-	-5	-	dB
	Adjacent channel selectivity @ F =F0+2	-	-35	-	dB
	Adjacent channel selectivity @ F =F0-2	-	-34	-	dB
	Adjacent channel selectivity @ F ≥F0+3	-	-41	-	dB
	Adjacent channel selectivity @ F ≤F0-3	-	-45	-	dB

Doctors of Intelligence & Technology 严禁复制

8. Recommended Sold Temperature Curve

(1) Reflow Times <= 2 times (Max.)

(2) Max Rising Slope: 3℃/sec

(3) Max Falling Slope: -3℃/sec

(4) Over 217℃ Time: 60~120sec

(5) Peak Temp:240℃~250℃

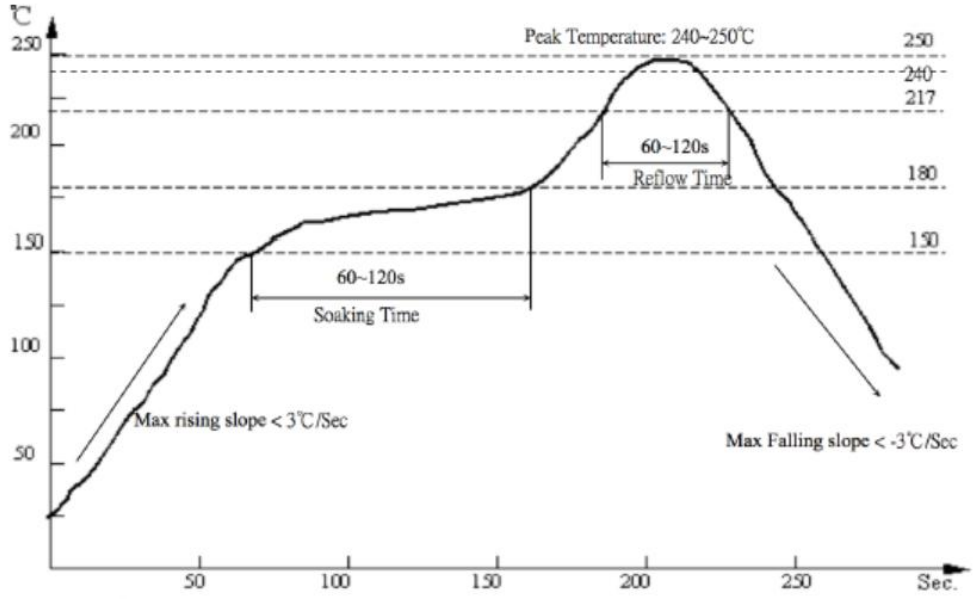

Fig.8.1 Recommended Reflow Profile

9. Minimum User System

This module can work just at 3.3V voltage condition:

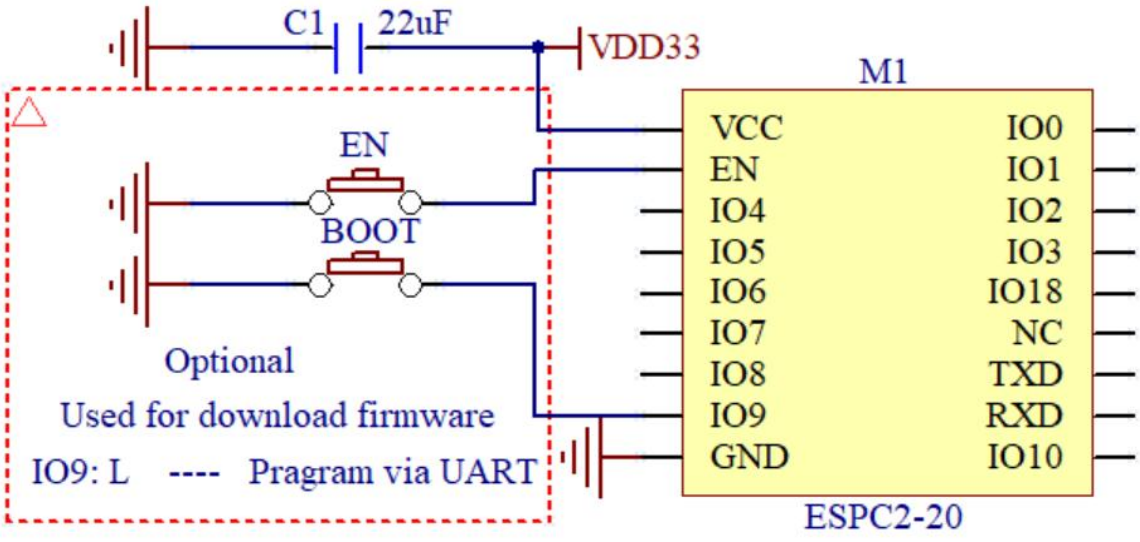

Fig.9.1 Minimum System

Note:

(1) The working voltage for module is DC 3.3V;

(2) The max current from IO of this module is 40mA;

(3) Wi-Fi module is at download mode: IO9 is LOW level, then module reset to power;

(4) Wi-Fi module is connected to RXD of the other MCU, and TXD is connected to RXD of the other MCU.

10. Recommended Layout Design

ESPC2-20E module can be sold on PCB board directly. For the high RF performance for the device, please notice the placement of the module. There are three ways to use the module for Wi-Fi Module with PCB antenna.

Solution 1: optical solution. The Wi-Fi module is placed on the side of the board, and the antennas are all exposed, and there is no metal material around the antenna, including wires, metal casings, weight plates, and the like.

Solution 2: sub-optical solution. The Wi-Fi module is placed on the side of the board, and the antenna below is hollowed out. There is a gap of not less than 5 mm reserved with the PCB, and there is no metal material around the antenna, including wires, metal casings, weight plates, and the like.

Solution 3: The Wi-Fi module is placed on the side of the board, and the PCB area under the antenna is empty, and copper cannot be laid.

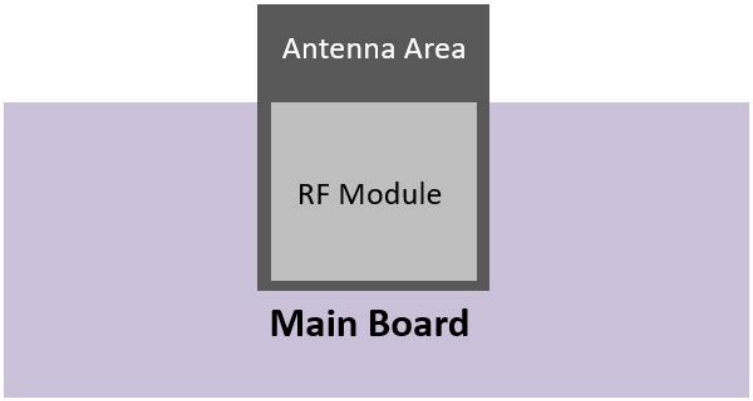

Fig.10.1 Solution 1

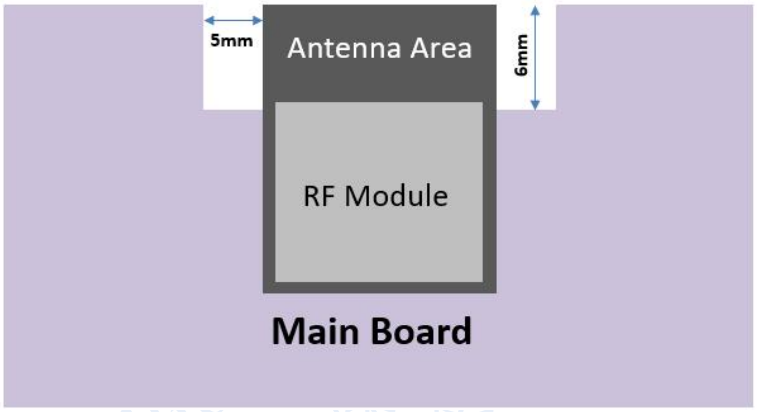

Fig.10.2 Solution 2

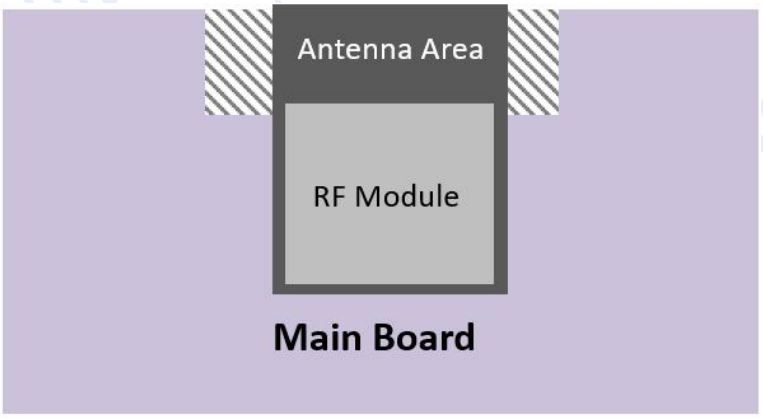

Fig.10.3 Solution 3

11. Peripheral Design Suggestion

Wi-Fi module is already integrated into high-speed GPIO and Peripheral interface, which may be generated the switch noise. If there is a high request for the power consumption and EMI characteristics, it is suggested to connect a serial 10~100 ohm resistance, which can suppress overshoot when switching power supply, and can smooth signal. At the same time, it also can prevent electrostatic discharge (ESD).

12. Product Handling

12.1 Storage Conditions

The products sealed in moisture barrier bags (MBB) should be stored in a non-condensing atmospheric environment of < 40 °C and 90%RH. The module is rated at the moisture sensitivity level (MSL) of 3. After unpacking, the module must be soldered within 168 hours with the factory conditions 25±5 °C and 60%RH. If the above conditions are not met, the module needs to be baked.

12.2 Electrostatic Discharge (ESD)

• Human body model (HBM): ±2000 V

• Charged-device model (CDM): ±500 V

13. U.FL RF Connector

ESPC2-20E module use U.FL type RF connector for external antenna connection. (IPEX V1.0).

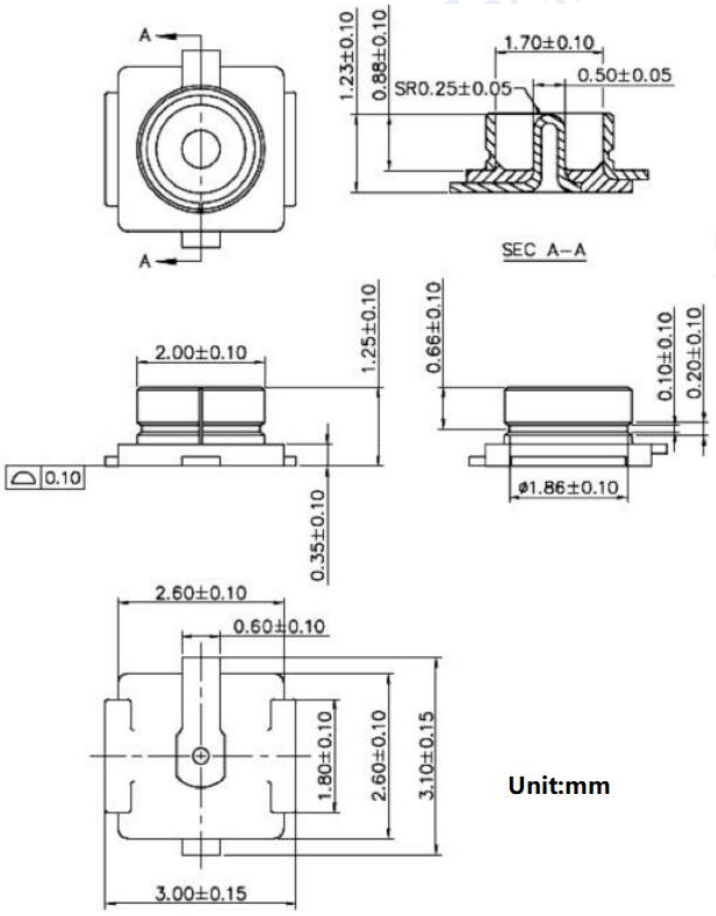

Fig.13.1 U.FL RF Connector

14. Packing Instruction

The product is packed in a tray, as shown in the following figure.

The size of the single box is: 340 x 360 x 60mm, and 650 pieces module is in the box. And the outer box size is 355 x 375 x 325mm, including 5 single box which include 3250 pieces module.



Fig.14.1 Module package

Doctors of Intelligence & Technology
严禁复制

15. Module Schematic

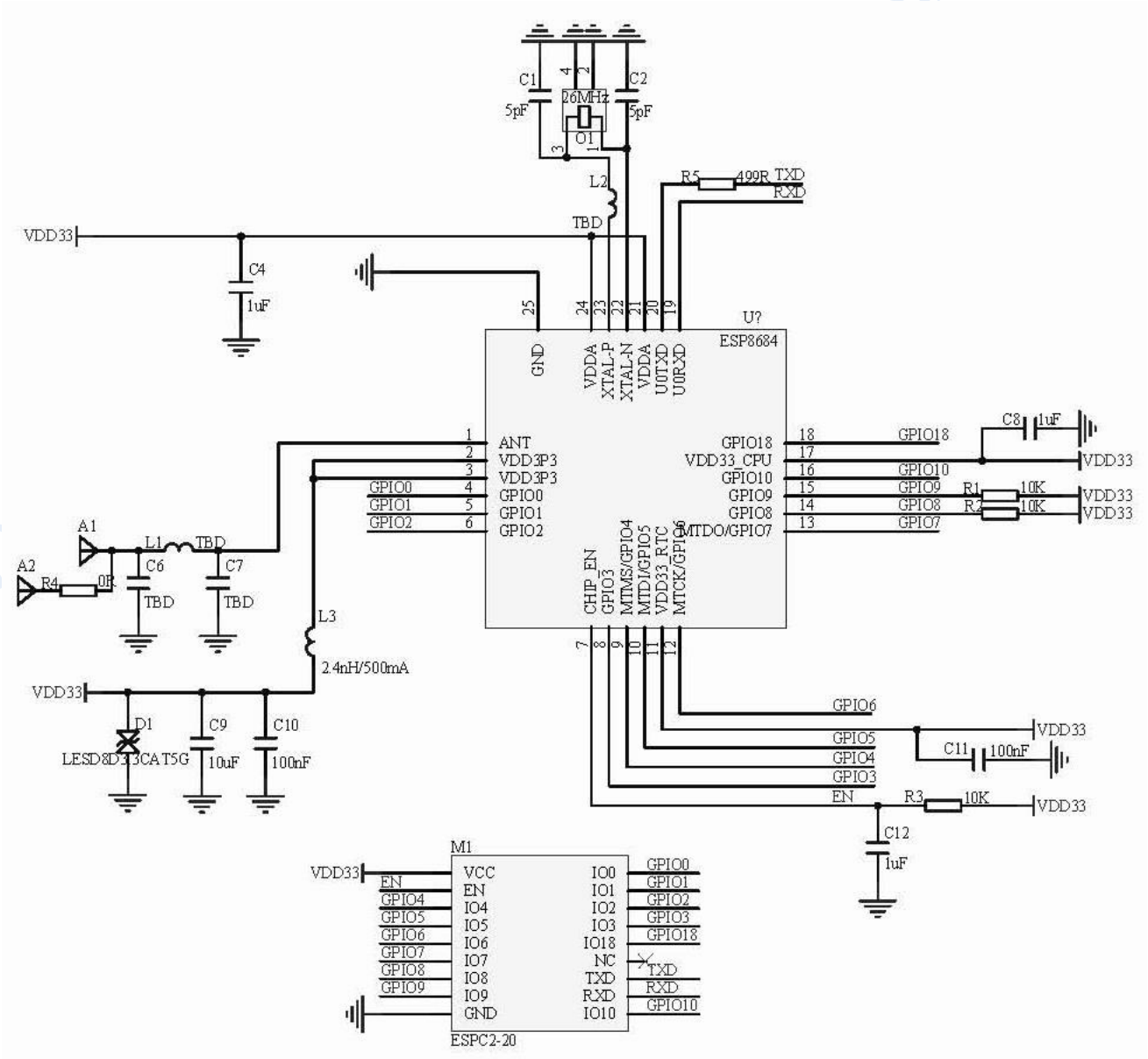

Doctors of Intelligence & Technology
严禁复制